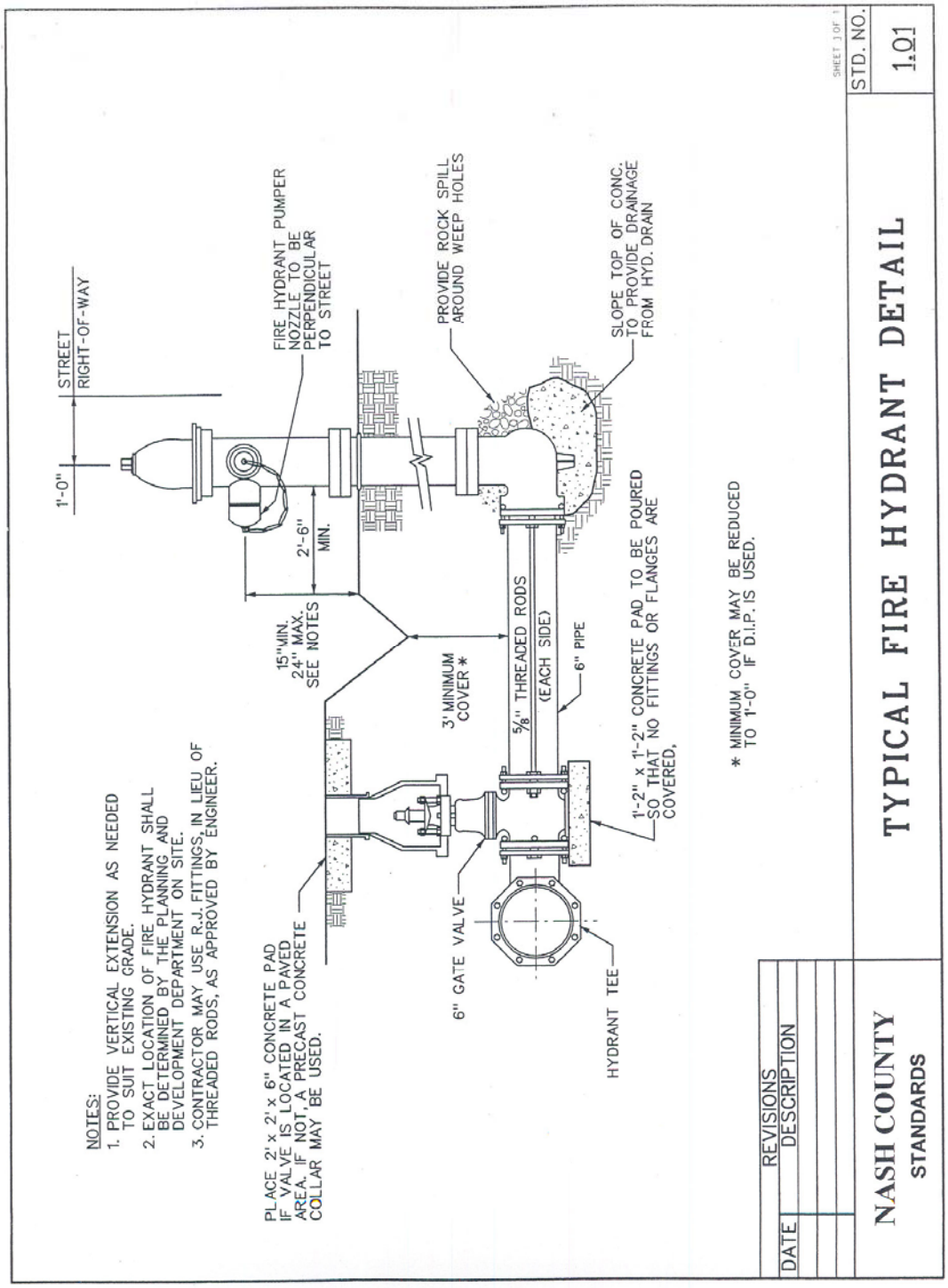
NOTES:
1. PROVIDE VERTICAL EXTENSION AS NEEDED TO SUIT EXISTING GRADE.
2. EXACT LOCATION OF FIRE HYDRANT SHALL BE DETERMINED BY THE PLANNING AND DEVELOPMENT DEPARTMENT ON SITE.
3. CONTRACTOR MAY USE R.J. FITTINGS, IN LIEU OF THREADED RODS, AS APPROVED BY ENGINEER.
PLACE 2' x 2' x 6" CONCRETE PAD IF VALVE IS LOCATED IN A PAVED AREA. IF NOT, A PRECAST CONCRETE COLLAR MAY BE USED.
1'-0"
STREET RIGHT-OF-WAY
FIRE HYDRANT PUMPER NOZZLE TO BE PERPENDICULAR TO STREET
2'-6" MIN.
15"MIN. 24" MAX. SEE NOTES
6" GATE VALVE
3' MINIMUM COVER *
5/8" THREADED RODS (EACH SIDE)
6" PIPE
HYDRANT TEE
PROVIDE ROCK SPILL AROUND WEEP HOLES
SLOPE TOP OF CONC. TO PROVIDE DRAINAGE FROM HYD. DRAIN
1'-2" x 1'-2" CONCRETE PAD TO BE POURED SO THAT NO FITTINGS OR FLANGES ARE COVERED,
* MINIMUM COVER MAY BE REDUCED TO 1'-0" IF D.I.P. IS USED.
SHEET 1 OF 1
STD. NO.
1.01
TYPICAL FIRE HYDRANT DETAIL
NASH COUNTY
STANDARDS
REVISIONS
DATE
DESCRIPTION

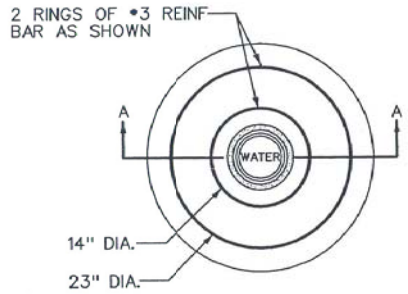

PLAN

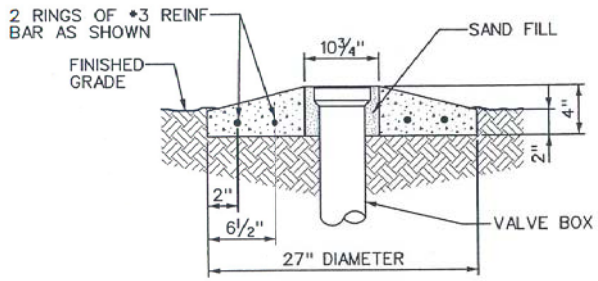

SECTION A-A

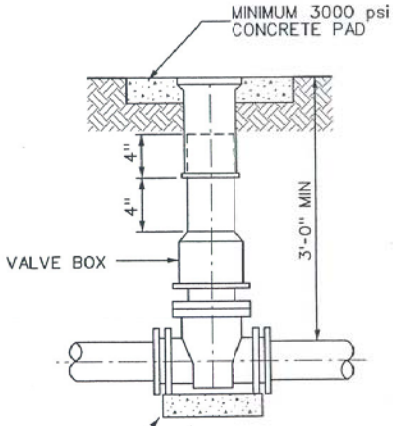

1'-2" x 1'-2" CONCRETE PAD TO BE POURED SO THAT NO FITTINGS OR FLANGES ARE COVERED. THIS WILL APPLY TO ALL VALVES AT ALL LOCATIONS.

REVISIONS	
DATE	DESCRIPTION

SHEET 1 OF 1

NASH COUNTY
STANDARDS

TYPICAL VALVE BOX INSTALLATION

STD. NO.
1.02

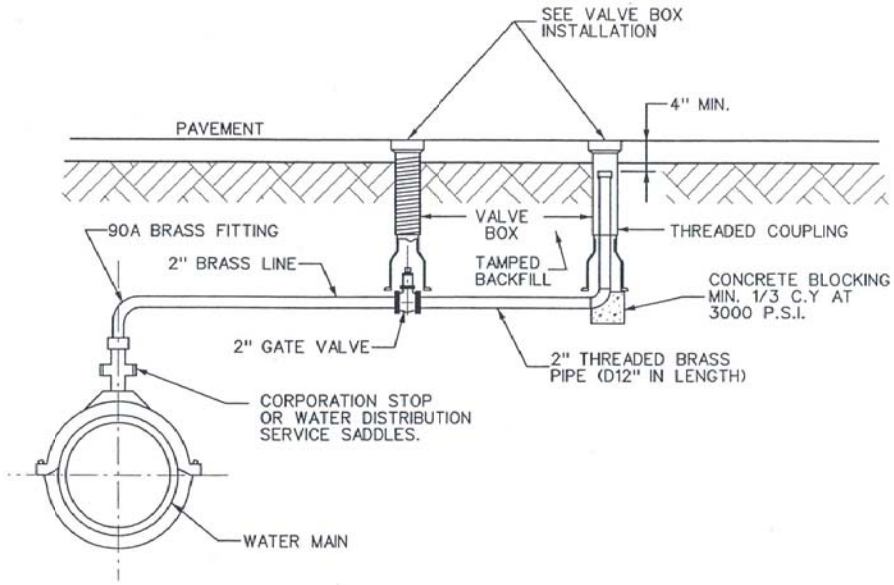

NOTES:

1. BLOW-OFF ASSEMBLY FOR 2" MAINS ARE TO BE CONSTRUCTED AS A CONTINUATION OF THE MAIN WITHOUT THE SERVICE SADDLE AND WITHOUT THE CORPORATION STOP.
2. CORPORATION STOP SHALL BE LOCATED IN TOP OF WATER MAIN.

REVISIONS	
DATE	DESCRIPTION

SHEET 1 OF 1

NASH COUNTY
STANDARDS

STANDARD 2" BLOW-OFF ASSEMBLY

STD. NO.
1.03

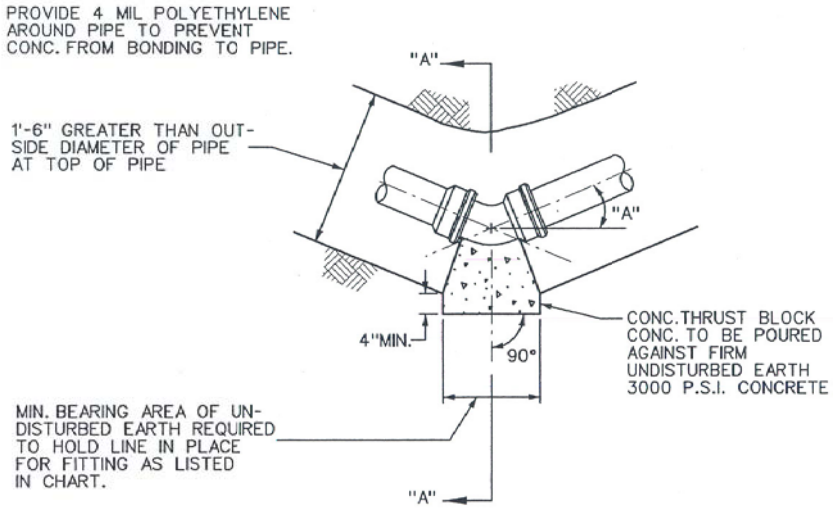

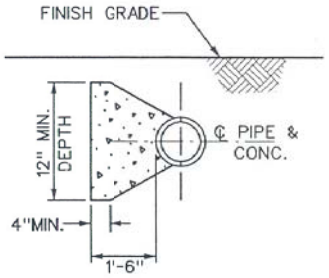

SECTION "A-A"

SQ. FT. BEARING AREA				
FITTING	4" PIPE	6" PIPE	8" PIPE	12" PIPE
90° BEND	1	3	5.5	40.8
D.E. OR TEE	1	2.5	3.8	31.5
45° OR LESS	1	2	3	22.1

EXCAVATE AS NEARLY VERTICAL AS POSSIBLE

REVISIONS	
DATE	DESCRIPTION

SHEET 1 OF 1

NASH COUNTY
STANDARDS

THRUST BLOCK FOR HORIZONTAL PIPE BENDS

STD. NO.
1.04

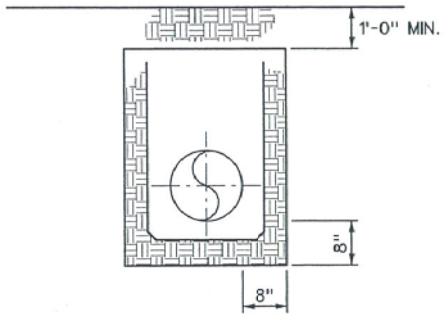

SECTION "C-C"

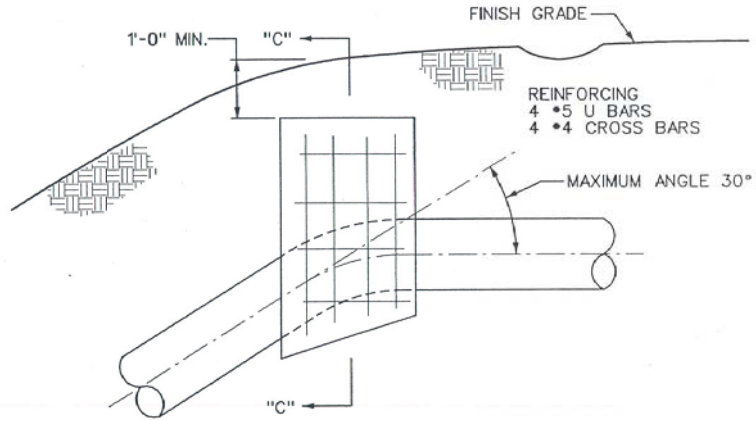

SIZE OF CONCRETE BLOCK OR CUBIC FEET OF CONCRETE:

$$\frac{\text{TOTAL RADIAL THRUST}}{\text{WEIGHT, C.F. OF CONCRETE}} = \frac{T}{150}$$

VERTICAL BENDS-THRUST 150 P.S.I.				
ANGLE	TOTAL RADIAL THRUST - LBS.			
	4" PIPE	6" PIPE	8" PIPE	12" PIPE
11 1/4° BEND	750	950	1,700	3,500
22 1/2° BEND	1,000	1,800	3,000	7,500
30° BEND	1,250	2,500	4,000	9,500

REVISIONS	
DATE	DESCRIPTION

SHEET 1 OF 1

NASH COUNTY
STANDARDS

VERTICAL THRUST BLOCK DETAIL

STD. NO.
1.05

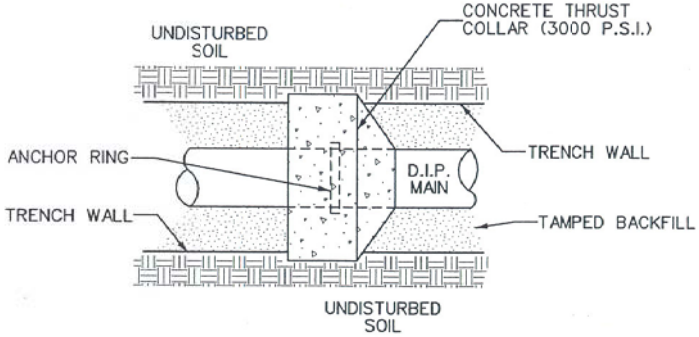

PLAN

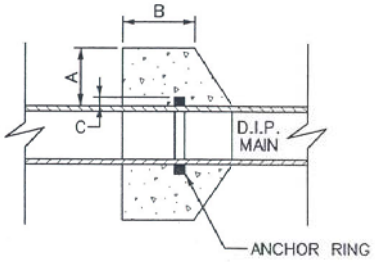

SECTION

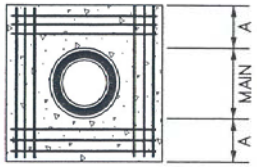

REINFORCING

NOTES:
6" TO 16" MAINS-12-NO.7 BARS
20" TO 36" MAINS-12-NO.8 BARS
BARS PLACED AS SHOWN

SCHEDULE

PIPE DIAMETER	CONCRETE THRUST COLLAR		ANCHOR RING	RING REQUIRED
	A	B	C	
6",8",12"	1'-0"	1'-0"	2"	ONE
16"	1'-4"	1'-0"	2"	ONE
20"	1'-4"	1'-0"	3"	ONE
24"	1'-4"	1'-0"	3"	TWO
30"	1'-4"	1'-2"	4"	TWO
36"	1'-4"	1'-4"	4"	TWO

REVISIONS

DATE	DESCRIPTION

SHEET 1 OF 1

NASH COUNTY
STANDARDS

STANDARD THRUST COLLAR INSTALLATION

STD. NO.
1.06

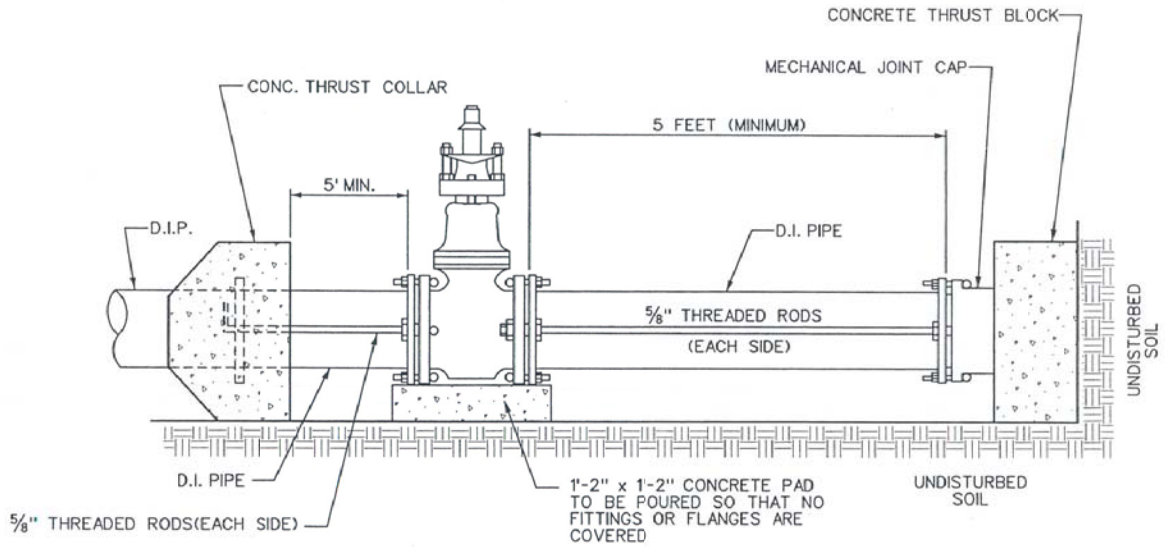

NOTE:
THIS DETAIL SHALL APPLY ONLY TO TEMPORARY CAPPING. PERMANENT DEAD END LINES TO BE EQUIPPED WITH BLOW OFF ASSEMBLY.

REVISIONS	
DATE	DESCRIPTION

SHEET 1 OF 1

NASH COUNTY
STANDARDS

STANDARD CAPPING DETAIL

STD. NO.
1.07

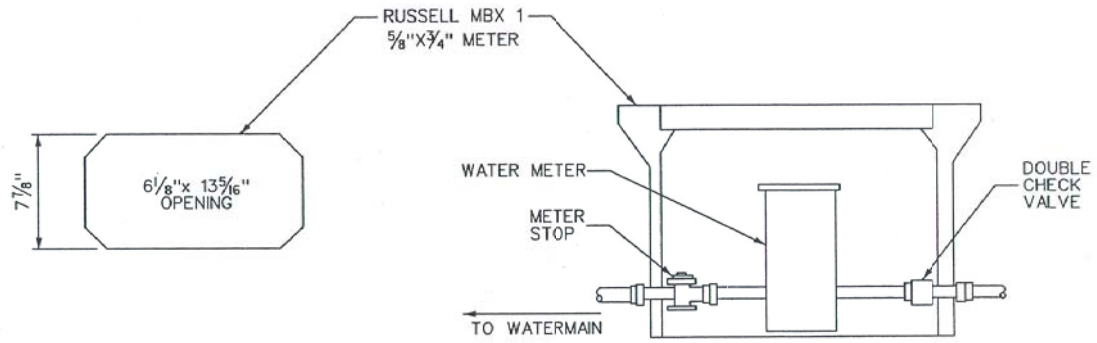

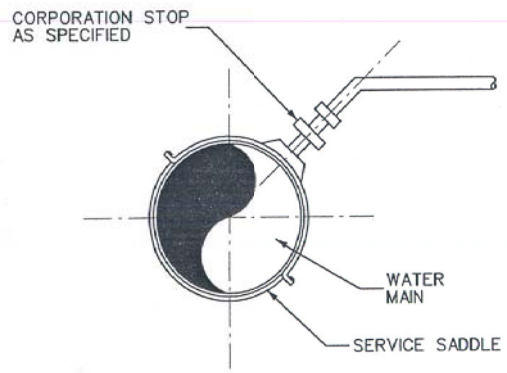

REVISIONS	
DATE	DESCRIPTION

SHEET 1 OF 1

NASH COUNTY
STANDARDS

WATER SERVICE ASSEMBLY

STD. NO.
1.08

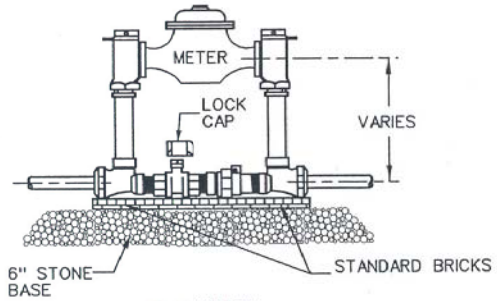

ELEVATION

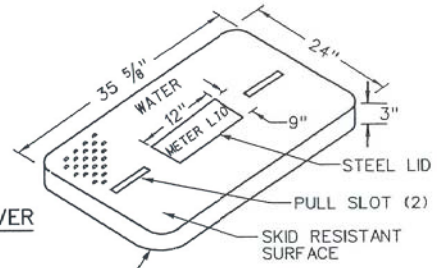

COVER

MATERIAL SHALL BE LIGHT WEIGHT POLYMER CONCRETE

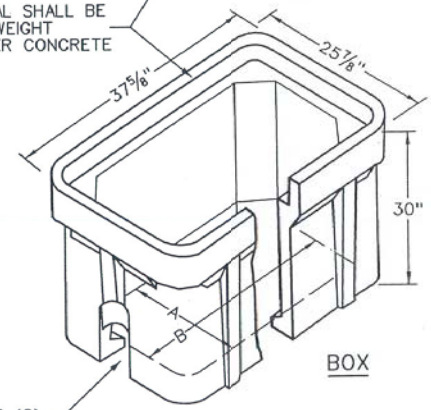

BOX

MOUSE HOLES (2)
4" x 4" OPENING
W/ 4" x 4" KNOCKOUT
ABOVE OPENING

DIMENSIONS (INCHES)
A = 18 3/8"
B = 30 1/8"

NOTES:

1. PIPING TO BE BRASS & COPPER TUBING AND SHALL BE EQUIPED W/ ANGLED CHECK VALVE OUTLETS & BY-PASS FLANGED BALL VALVE INLETS.
2. PRECAST CONCRETE BOX W/ ALUMINUM ACCESS HATCH WILL BE AN ACCEPTABLE ALTERNATIVE WITH APPROVAL OF THE TOWN.
3. TO ENSURE POSITIVE DRAINAGE, THE VAULT SHOULD BE TIED INTO THE EXISTING STORM DRAINAGE SYSTEM WHEN POSSIBLE.

REVISIONS	
DATE	DESCRIPTION

SHEET 1 OF 1

NASH COUNTY
STANDARDS

STANDARD 1 1/2" & 2" METER INSTALLATION AND VAULT

STD. NO.
1.09

NOTES:

1. METER AND BY-PASS ASSEMBLY TO BE DUCTILE IRON FLANGED PIPE.
2. METER FACE TO BE A MAXIMUM OF 3.5' BELOW FINISHED GRADE.
3. ADJUSTABLE CONNECTING PIECE TO BE APPROVED BY COUNTY.
4. ACCESS DOOR SHALL BE ALUMINUM DOUBLE DOOR WITH A MINIMUM OPENING OF 42"x36".
5. VALVES SHALL BE IRON BODY TYPE.
6. EITHER SOLID BRICK, SOLID BLOCK OR PRECAST CONCRETE MAY BE USED.
7. TO ENSURE POSITIVE DRAINAGE, THE VAULT SHOULD BE TIED INTO THE EXISTING STORM DRAINAGE SYSTEM WHEN POSSIBLE.
8. ALL EXPOSED METAL SURFACES SHALL RECEIVE A COAT OF COAL TAR EPOXY.

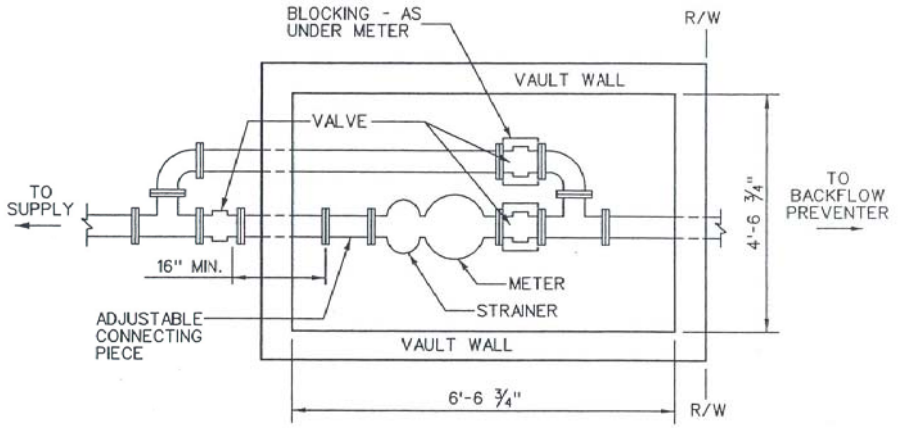

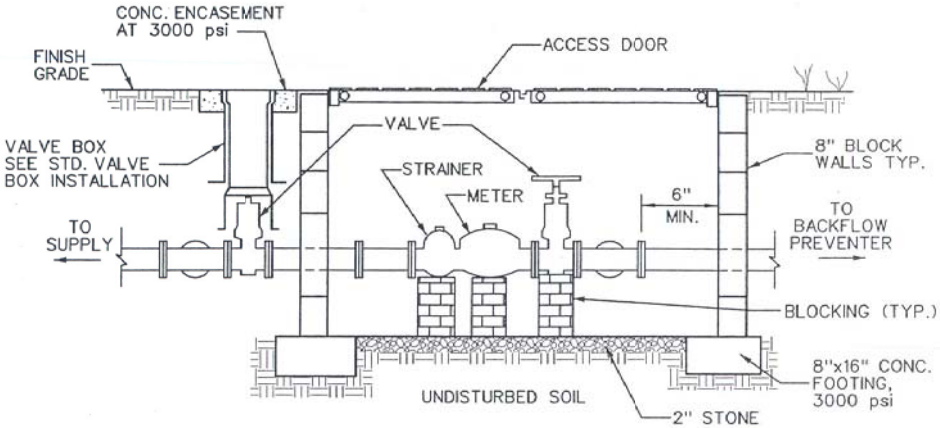

REVISIONS	
DATE	DESCRIPTION

SHEET 1 OF 1

NASH COUNTY
STANDARDS

STANDARD 3" & 4" METER INSTALLATION AND VAULT

STD. NO.
1.10

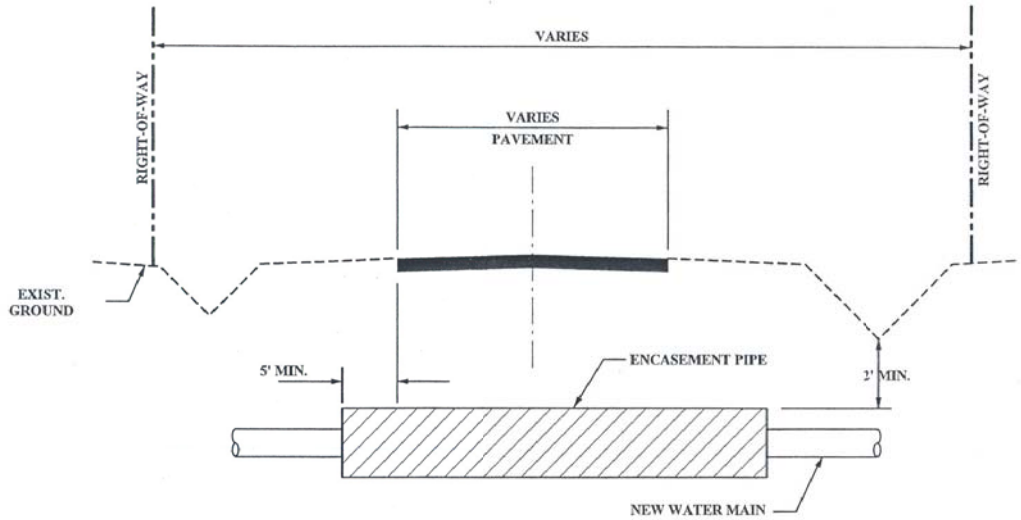

NOMINAL WATER SIZE	ENCASEMENT SIZE	MINIMUM WALL THICKNESS NCDOT CROSSING	MINIMUM WALL THICKNESS RAILWAY CROSSING
4	NONE	---	---
6	12"	0.188"	0.188"
8	16"	0.250"	0.281"
10	18"	0.250"	0.312"
12	20"	0.250"	0.344"

NOTES:

METAL "SPIDERS" SHALL BE USED FOR SUPPORT OF THE CARRIER PIPE WITHIN THE CASING PIPE. SEE DETAIL 1.12.

REVISIONS	
DATE	DESCRIPTION

SHEET 1 OF 1

NASH COUNTY
STANDARDS

BORE CROSSING DETAIL

STD. NO.
1.11

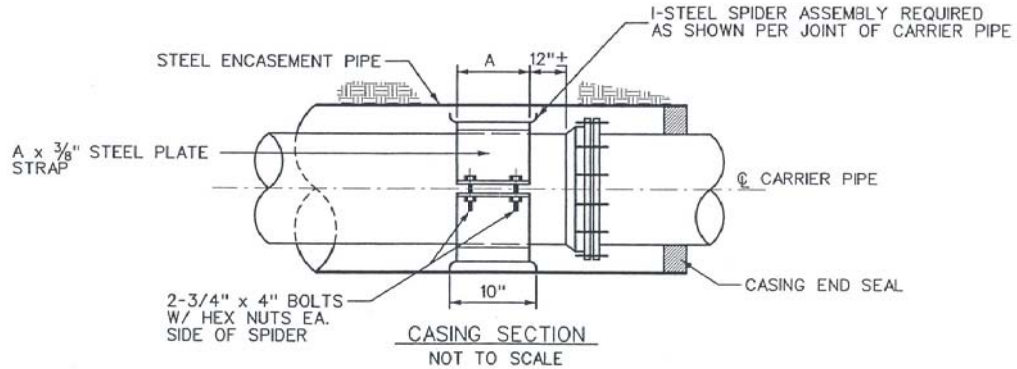

CASING SECTION
NOT TO SCALE

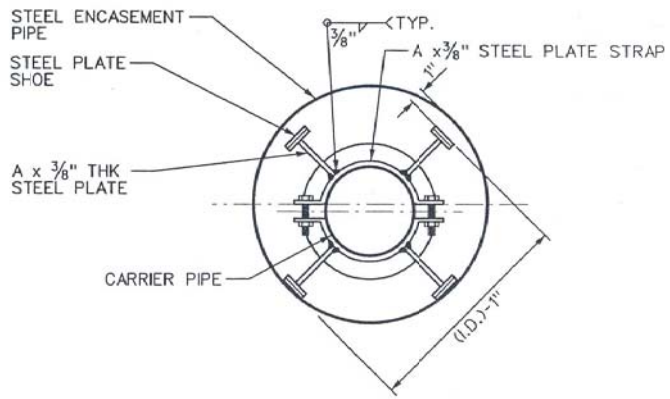

END ELEVATION
NOT TO SCALE

NOTES:

1. "A" - 8" FOR PIPES 14" AND UNDER
   "A" - 12" FOR PIPES 16" AND OVER
2. ENTIRE SPIDER ASSEMBLY TO BE BITUMINOUS COATED AFTER FABRICATION.

REVISIONS	
DATE	DESCRIPTION

SHEET 1 OF 1

NASH COUNTY
STANDARDS

WATER LINE STEEL ENCASEMENT

STD. NO.
1.12

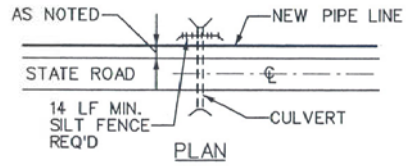

PLAN

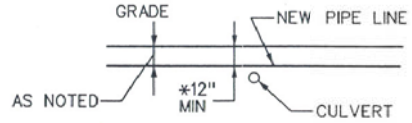

PROFILE

CONDITION 1

PIPE LINE OVER CULVERT

*18" MIN FOR CROSSING OF SANITARY SEWER

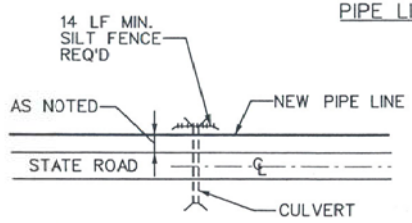

PLAN

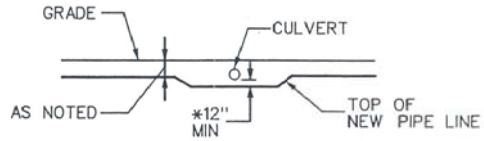

PROFILE

CONDITION 2

PIPE LINE UNDER CULVERT

*18" MIN FOR CROSSING OF SANITARY SEWER

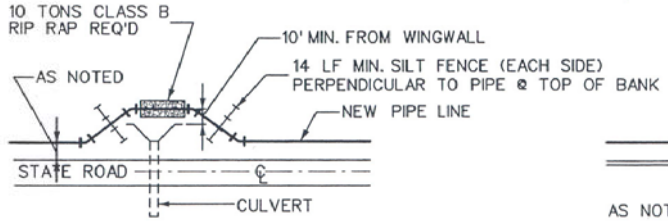

PLAN

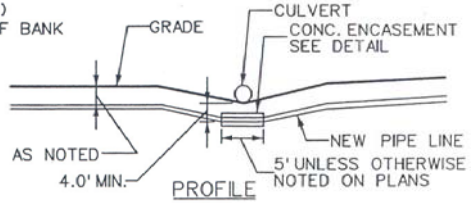

PROFILE

CONDITION 3

PIPE LINE AROUND END OF CULVERT

REVISIONS	
DATE	DESCRIPTION

SHEET 1 OF 1

NASH COUNTY
STANDARDS

INSTALLATION OF PIPELINE AT CULVERT DETAIL

STD. NO.
1.13

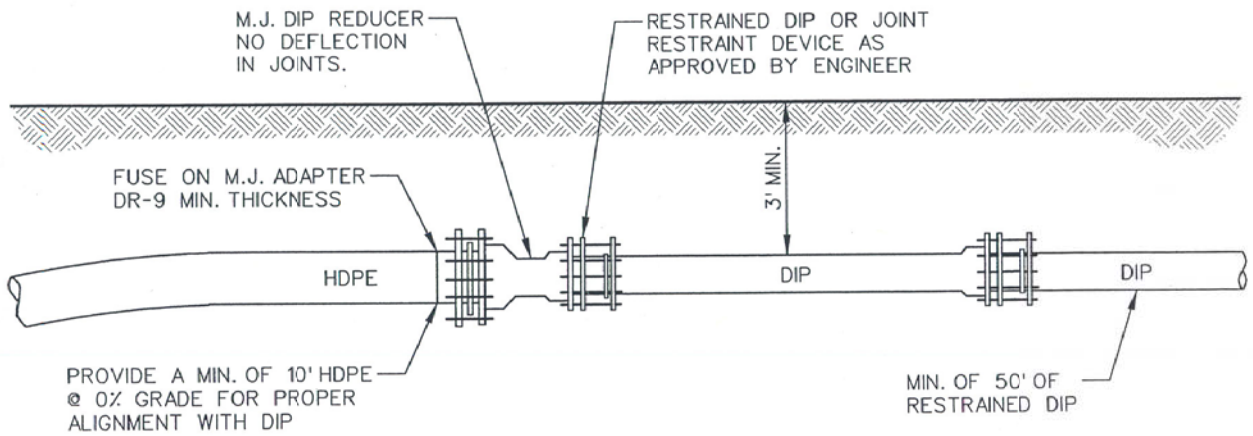

REVISIONS	
DATE	DESCRIPTION

SHEET 1 OF 1

NASH COUNTY
STANDARDS

PIPELINE RESTRAINT AT HDPE/DI CONNECTIONS DETAIL

STD. NO.
1.14

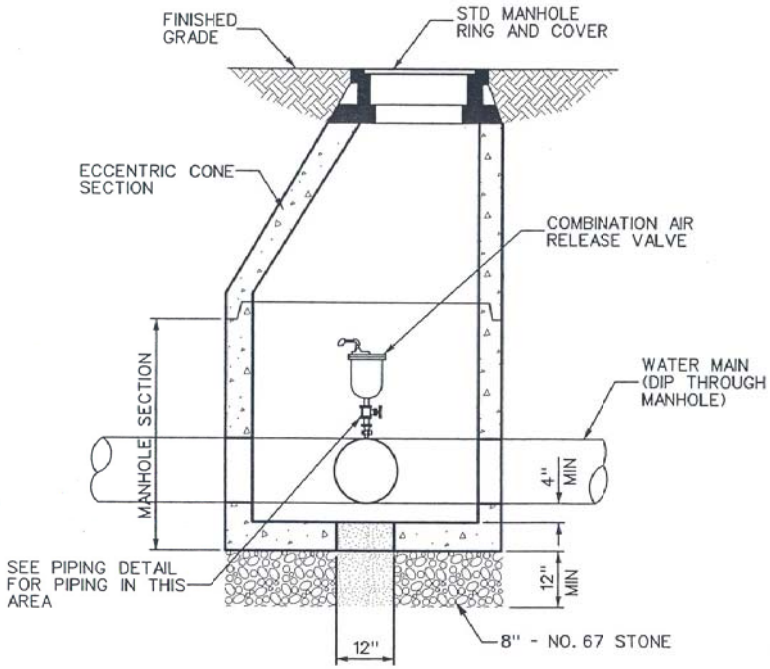

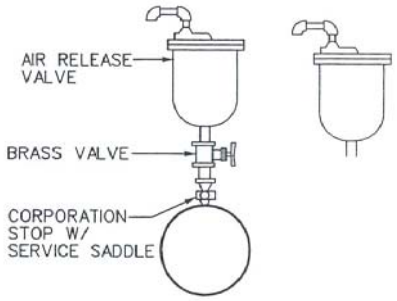

PIPE DETAIL

NOTES:

1. TAP PIPE AND ISOLATION VALVE TO BE SAME SIZE AS AIR RELEASE VALVE.
2. ALL PIPING AND FITTINGS IN THE MANHOLE, SHALL BE BRASS OR BRONZE UNLESS OTHERWISE NOTED.
3. MANHOLE STEPS SHALL BE PLACED 16" OC WHEN DEPTH OF MANHOLE EXCEEDS 5 FEET.
4. CENTER MANHOLE OPENING, FOR MANHOLE DEPTHS LESS THAN 5 FEET.

REVISIONS	
DATE	DESCRIPTION

SHEET 1 OF 1

NASH COUNTY
STANDARDS

COMBINATION AIR VALVE MANHOLE (FOR WATER MAINS)

STD. NO.
1.15

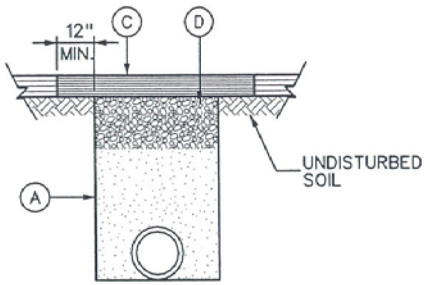

SECONDARY
PAVED ROADS

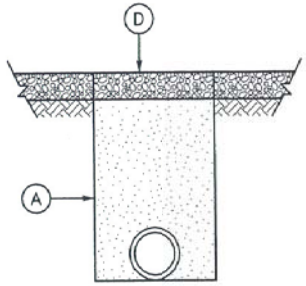

SECONDARY
UNPAVED ROADS

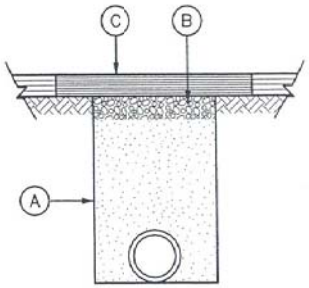

PRIVATE
PAVED DRIVE

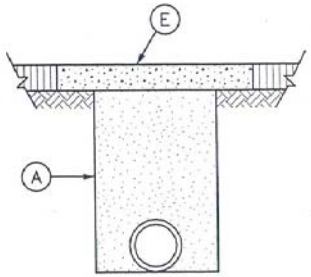

PRIVATE
CONCRETE DRIVE

NOTES:

A. AREA TO BE TAMPED.

B. 6" OF CRUSHED STONE.

C. 2" BITUMINOUS CONCRETE SURFACE COURSE TYPE I-2.*

D. 8" CRUSHED STONE.

E. NEW CONCRETE ½" THICKER THAN EXISTING CONCRETE, BUT NO CASE LESS THAN 6 INCHES THICK.*

* IN PAVED AREAS, REMOVE AND REPLACE PAVEMENT A MINIMUM OF 12 INCHES BEYOND TRENCH EXCAVATION.

SEE SPECIFICATIONS FOR GRAVEL DRIVES

REVISIONS	
DATE	DESCRIPTION

SHEET 1 OF 1

NASH COUNTY
STANDARDS

PAVEMENT REPLACEMENT DETAIL

STD. NO.
1.16

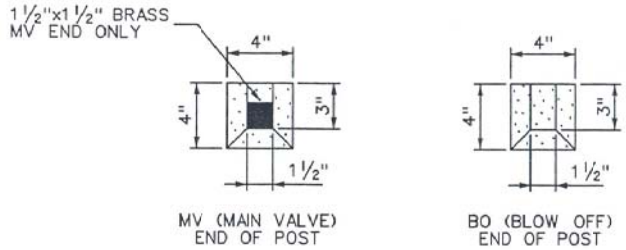

TOP VIEW

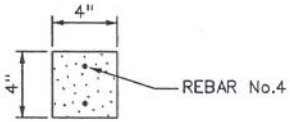

CROSS SECTION A-A

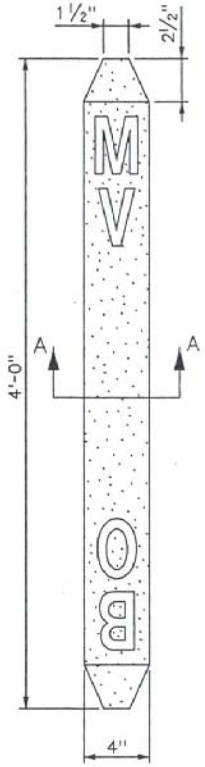

SIDE VIEW

NOTES:

1. MARKER POST IS MADE OF 5000 PSI CONCRETE.
2. ALL DIMENSIONS ARE NOMINAL.

REVISIONS	
DATE	DESCRIPTION

SHEET 1 OF 1

NASH COUNTY
STANDARDS

4'x4"x4" WITNESS POST

STD. NO.
1.17